Vocas Systems b.v. info@vocas.com www.vocas.com

MB-325

0300-0325

Version Date: 19-9-2011 17:18

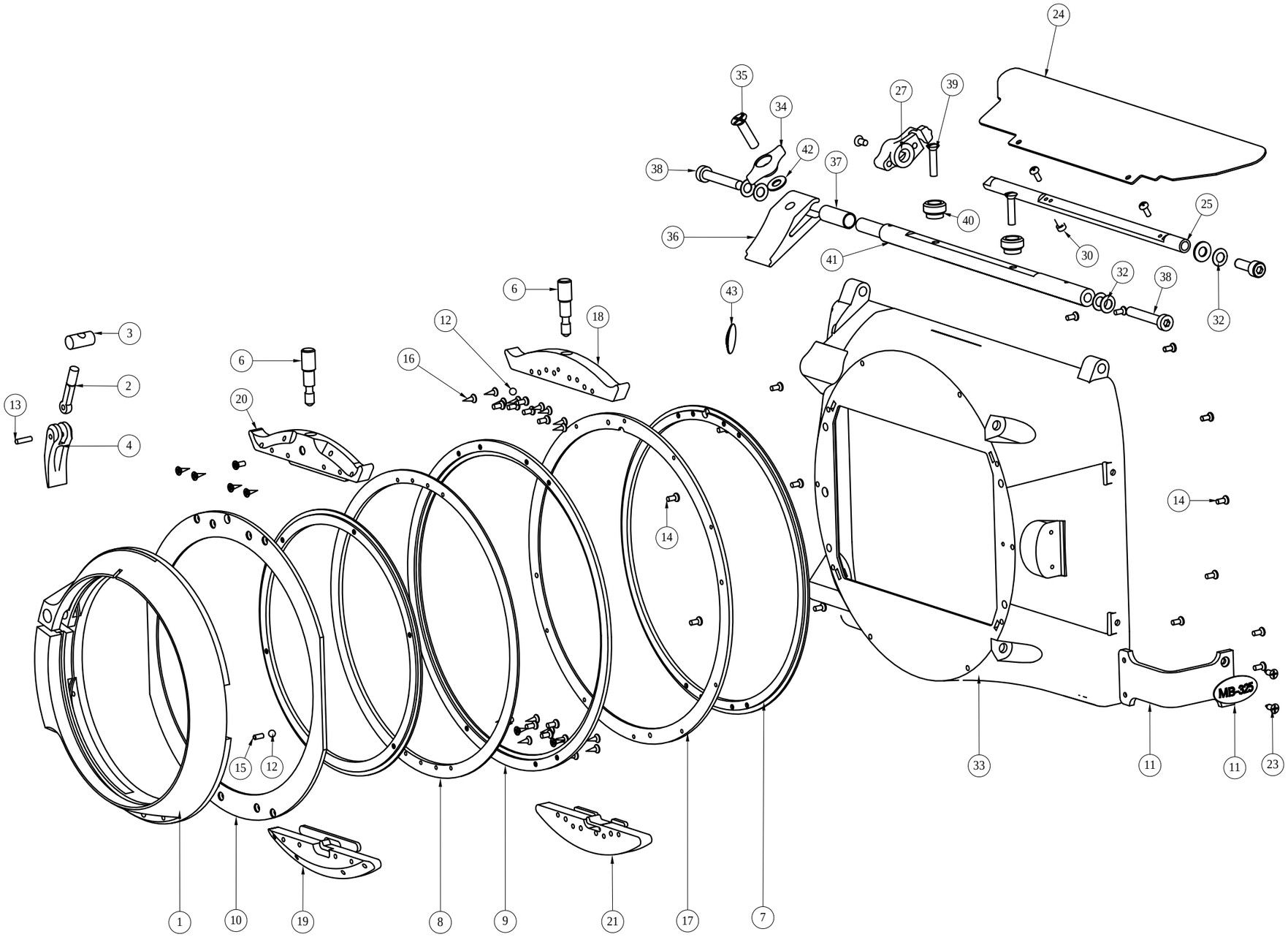

Item No.	Part Number	Qty	Description
1	708008	1	Clampring
2	716002	1	Clamp bolt
3	715001	1	Clamp nut
4	714004	1	Clamp lever SG
5	703003	1	Rear inside ring
6	707002	2	Filter lock screw
7	702004	1	Front inside ring
8	704102	1	Between inside ring
9	704201	1	Between outside ring
10	704002	1	Rear outside ring 2
11	706005	1	Support bracket (MB-320/350)
12	746102	2	Bearing 3MM. (KUG-3-G10)
13	740002	1	Pin 2h6X8 ISO8734
14	744003	29	Screw M2X5 DIN965 4.8 ZN Z
15	03.029.01	2	Spring 1.9x4.4 CS61
16	02.015.02	24	Screw 2.2X6.5 ISO 7050CH ST ZN
17	701003	1	Front outside ring
18	06.022.01	1	Guide base left front v3
19	06.021.01	1	Guide base right rear v3
20	06.020.01	1	Guide base left rear v3
21	06.023.01	1	Guide base right front v3
22	06.015.01	1	Label MB-325
23	02.015.01	2	Screw 2,2X6,5 DIN7982C ST ZN Z
24	06.003.01	2	Eyebrow Hood MKII
25	06.002.01	2	Eyebrow shaft
26	06.009.01	2	Screw M2,5x5din965 ZnZ
27	06.001.02	2	Eyebrow knob MKII SG
28	767001	2	Screw M4x12 DIN 912 A2 70
29	02.028.01	2	Ring M4 DIN 125 st zn Z
30	06.006.01	2	Screw M2x4 DIN X 912 12.9 ZNZ
31	01.047.01	4	Screw M2X5 DIN7985 4,8 ZNZ
32	739001	6	Cupspring M4X0,3 DIN2093 RVS
33	03.038.01	1	Hood MB3XX DVMB WA assy
34	05.004.02	1	Winged nut M4
35	06.008.01	1	Screw M4x16 din 965 A4
36	06.005.01	1	Flag clamper
37	06.011.01	1	Friction Tube
38	737001	2	Screw M4X25 UFK ZN Z
39	741002	2	Screw M3x12 DIN964 A2 70
40	712003	2	Flag screw M3
41	06.004.01	1	Flag rod MKII
42	749001	1	Ring M4 BLGEST-MN
43	03.014.01	1	Label Vocas