exploded view
#0100-0203 universal clamper

05-12-2007

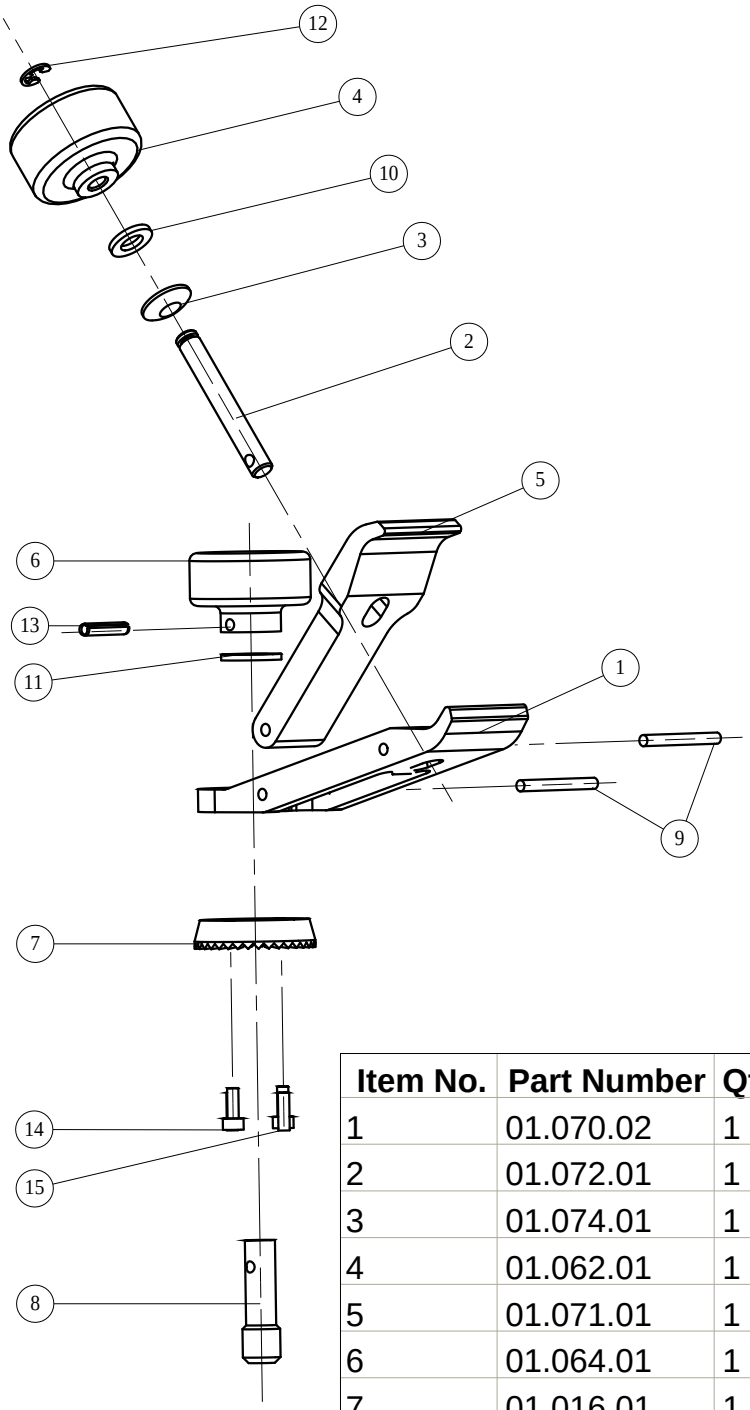

Item No.	Part Number	Qty	Description
1	01.070.02	1	Clamper long
2	01.072.01	1	Bolt M6
3	01.074.01	1	Ring sphere
4	01.062.01	1	Knob M6
5	01.071.01	1	Clamper short
6	01.064.01	1	Knurled knob 8MM.
7	01.016.01	1	Toothed ring
8	01.065.02	1	Bolt M10
9	01.073.01	2	Pin 3m6 X 28 ISO8734
10	01.069.01	1	Ring DIN125-A6,4 Fiber
11	01.068.01	1	Ring DIN125-A8,4 Fiber
12	01.067.01	1	Clip 4 DIN 6799 RVS
13	01.066.01	1	Pin 3X16 ISO 8752 RVS A1
14	01.049.01	2	Screw M3X8 DIN912 A2 70
15	01.046.01	2	Pin 3h6X10 ISO8734 st

Vocas systems B.V.
P.o. box 191, 1200 AD Hilversum, The Netherlands Tel: +31(0)35-6233707 Fax:+31(0)35-6233997
info@vocas.nl www.vocas.com