Vocas Systems b.v. info@vocas.com www.vocas.com

H-cheese plate Sony PXW-FS7 FX9

0350-1366

Version Date: 15/03/2022 10:23

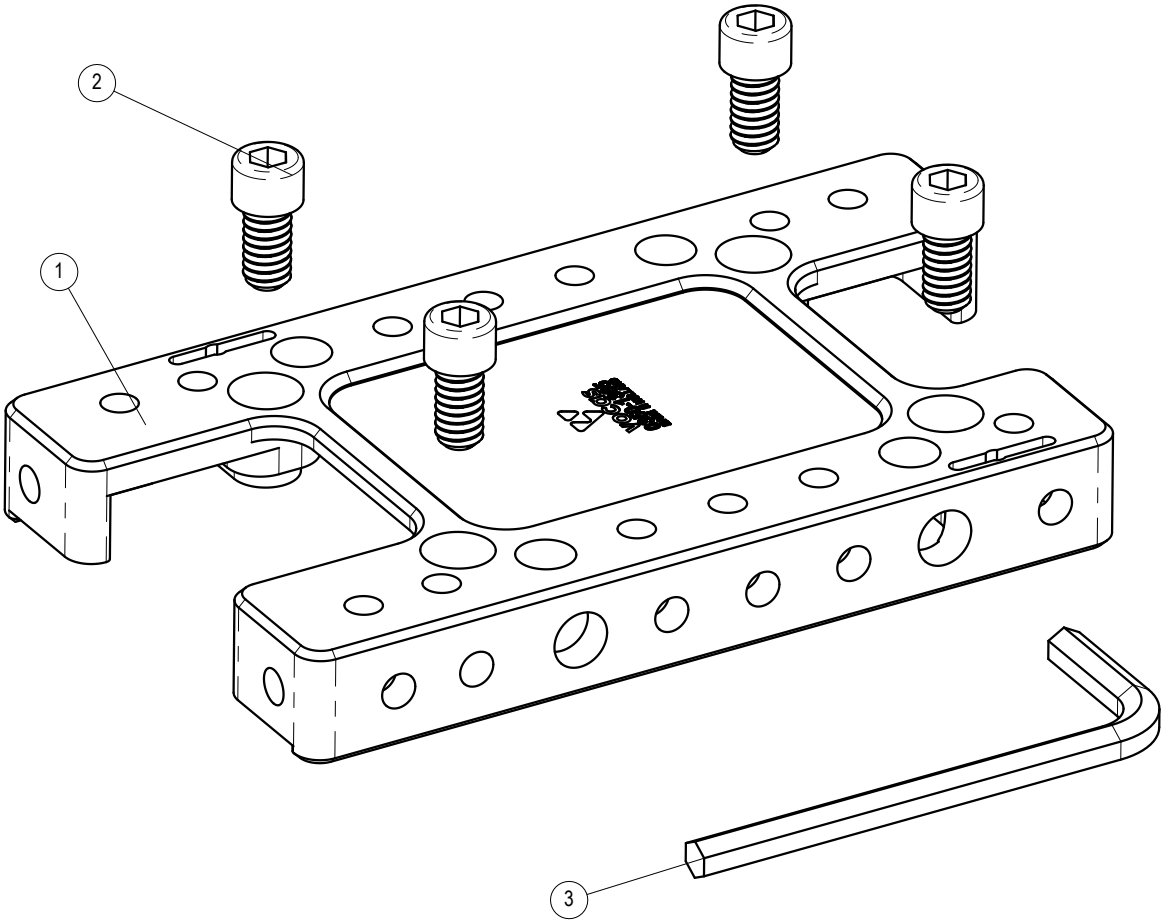

Item No.	Part Number	Qty	Description
1	11.211.03	1	Cheese plate 4
2	11.210.01	4	Screw UNC 1/4"X 1/2" C1936 A2
3	09.061.01	1	Hex. key 3/16" 4,76mm. Unbrako DIN 911 kort